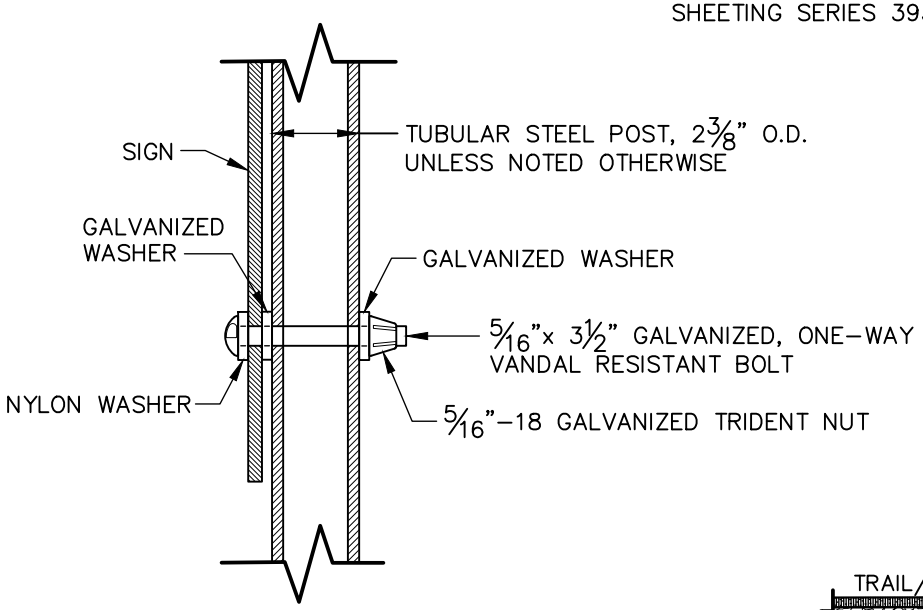

POST MOUNTING DETAIL

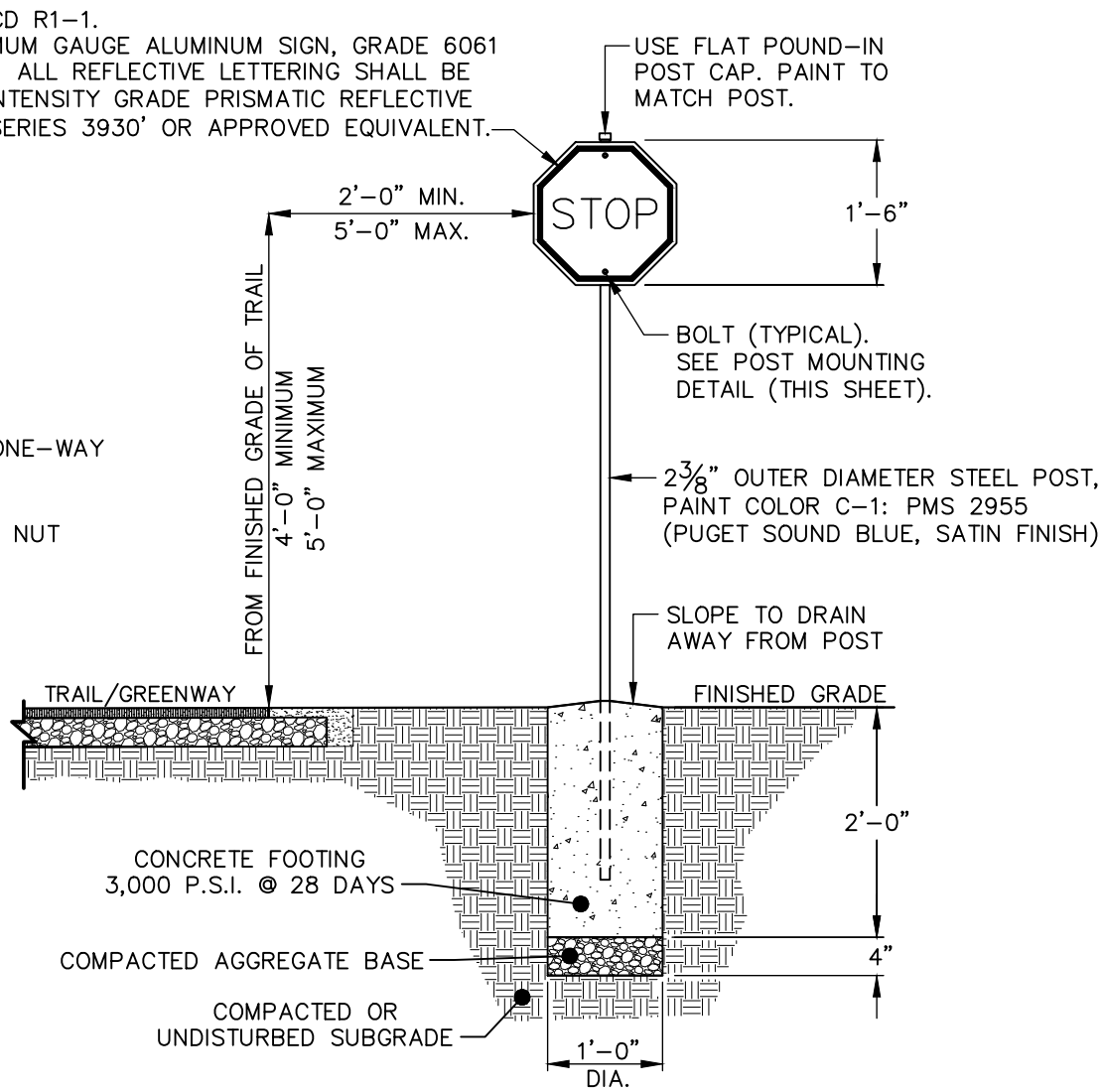

FRONT VIEW

NOTES:
1. COLOR CODE REFERENCE THE PANTONE MATCHING SYSTEM.
2. ALL VISIBLE WELDS TO BE CONTINUOUS AND GROUND TO PROVIDE A SMOOTH SURFACE.
3. SIGN SHALL MEET CURRENT **MUTCD** REQUIREMENTS FOR COLOR AND REFLECTION.

EFFECTIVE: 07/01/21

STANDARD PUBLIC TRAIL SIGN: STOP

DETAIL No.

9700.01