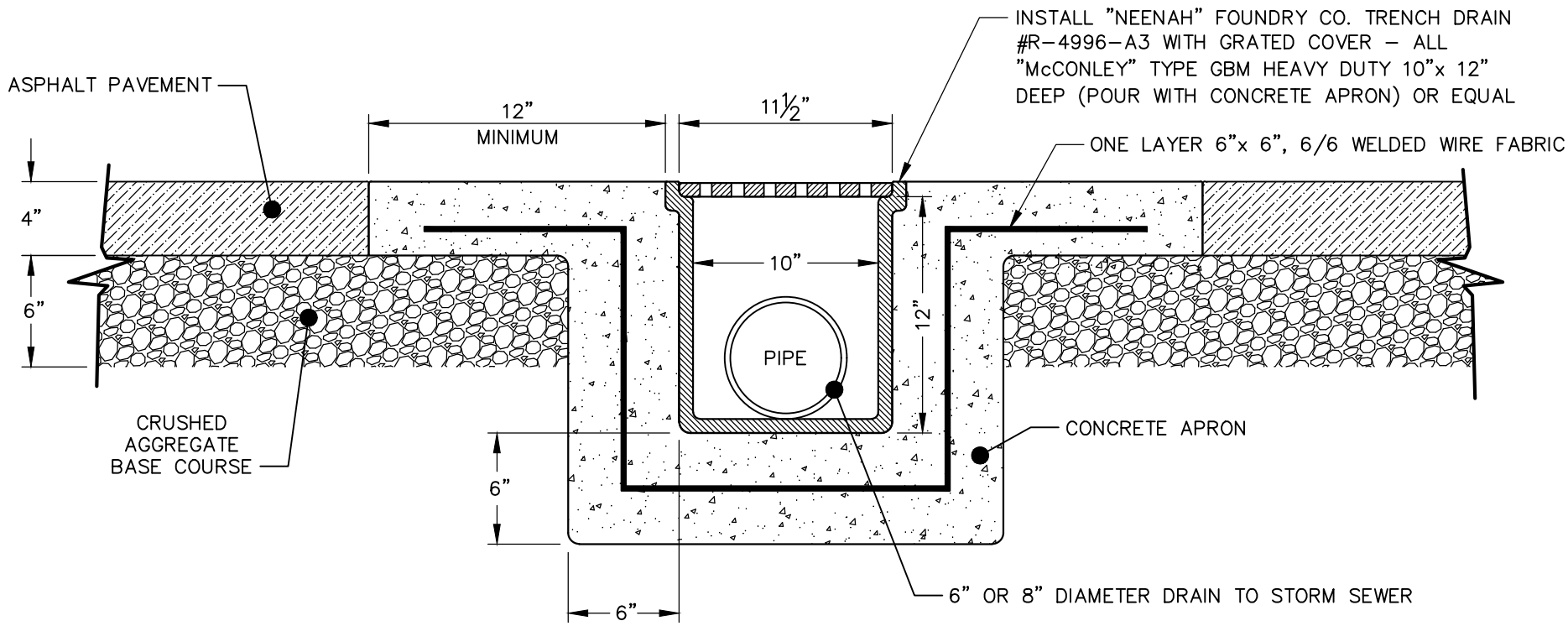

SECTION VIEW

EFFECTIVE: 07/01/22

STANDARD TRENCH DRAIN

DETAIL No.

9600.03