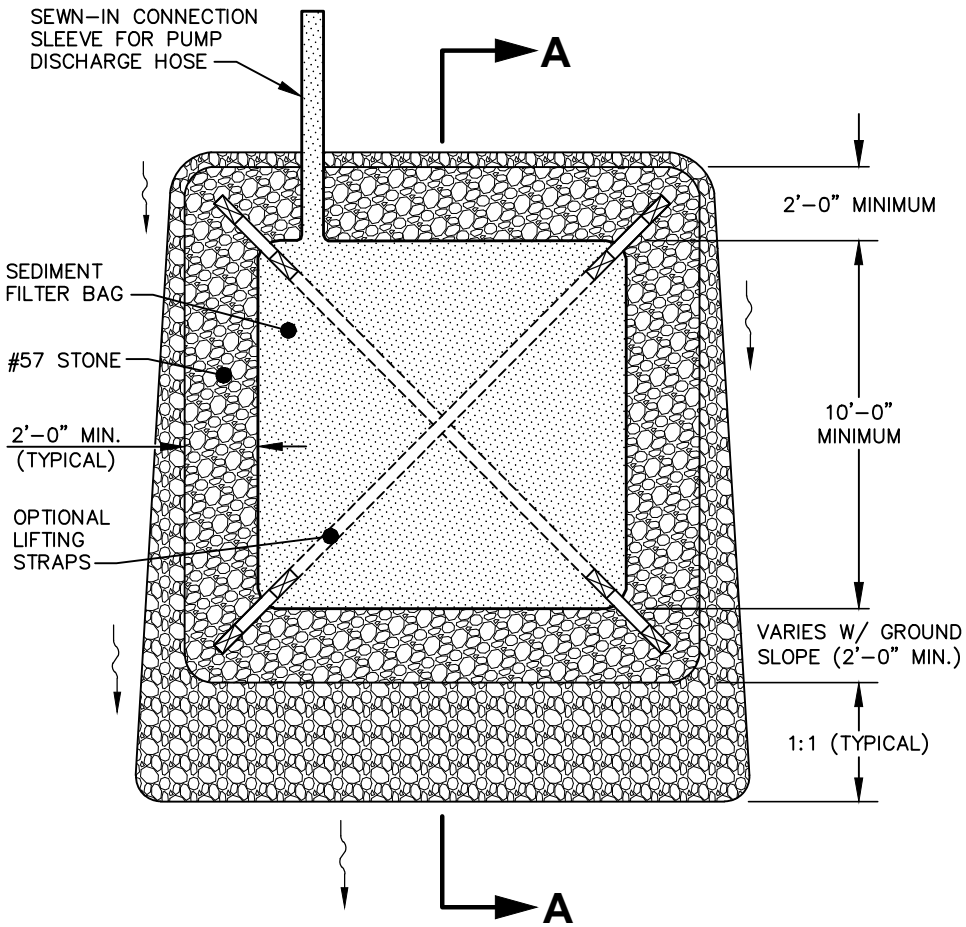

PLAN VIEW

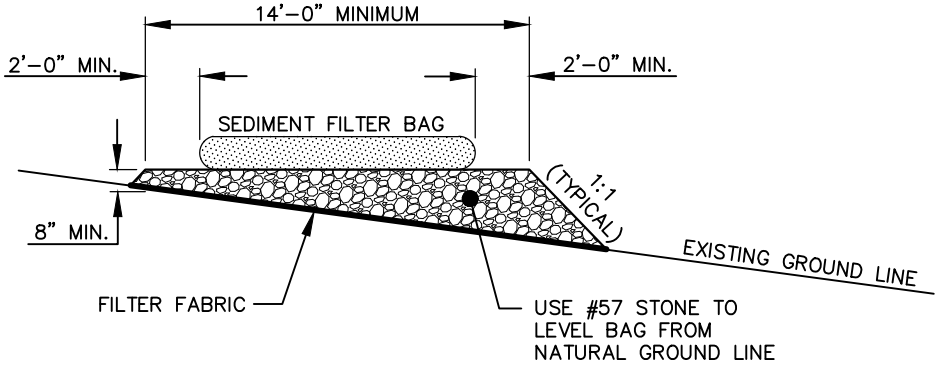

SECTION A-A

SEDIMENT FILTER BAG GENERAL NOTES:

1. CONTRACTOR SHALL EXERCISE CAUTION NOT TO BURST OR DAMAGE THE SEDIMENT FILTER BAG WHEN PUMPING. WHEN PUMPING, THE INTAKE SHALL BE LOCATED SO AS TO DRAW IN FROM THE SURFACE.
2. THE LENGTH AND WIDTH OF THE TEMPORARY SEDIMENT BAG SHOWN ON THIS DRAWING MAY VARY PER VENDOR SPECIFICATIONS. THE MINIMUM "FOOTPRINT" OF THE BAG SHALL BE 10 x 15 FEET.
3. SEDIMENT FILTER BAGS SHALL BE EQUIPPED WITH A SEWN-IN SLEEVE OF SUFFICIENT SIZE TO ACCEPT A MINIMUM 4 INCH DIAMETER PUMP DISCHARGE HOSE. THE DISCHARGE HOSE SHOULD BE EXTENDED INTO THIS SLEEVE A MINIMUM OF 6 INCHES AND BE TIGHTLY SECURED WITH A HOSE CLAMP OR OTHER SUITABLE MEANS TO PREVENT LEAKAGE. HOSE CONNECTION THROUGH A SLIT IN THE BAG WILL NOT BE ACCEPTABLE.
4. THE PUMP DISCHARGE HOSE CONNECTION SLEEVE SHALL BE SECURELY TIED OFF DURING DISPOSAL OF THE SEDIMENT FILTER BAG IN ORDER TO PREVENT LEAKAGE OF COLLECTED SEDIMENTS.
5. SEDIMENT FILTER BAG SHALL BE MAINTAINED AND REPLACED WHEN ONE HALF FULL OF SEDIMENT OR IN ACCORDANCE WITH THE MANUFACTURER'S RECOMMENDATIONS.
6. ADDITIONAL BAGS SHALL BE AVAILABLE ONSITE AT ALL TIMES DURING PUMPING OPERATIONS.

EFFECTIVE: 07/01/23

SEDIMENT FILTER BAG WITH GRAVEL PAD

DETAIL No.

4000.26