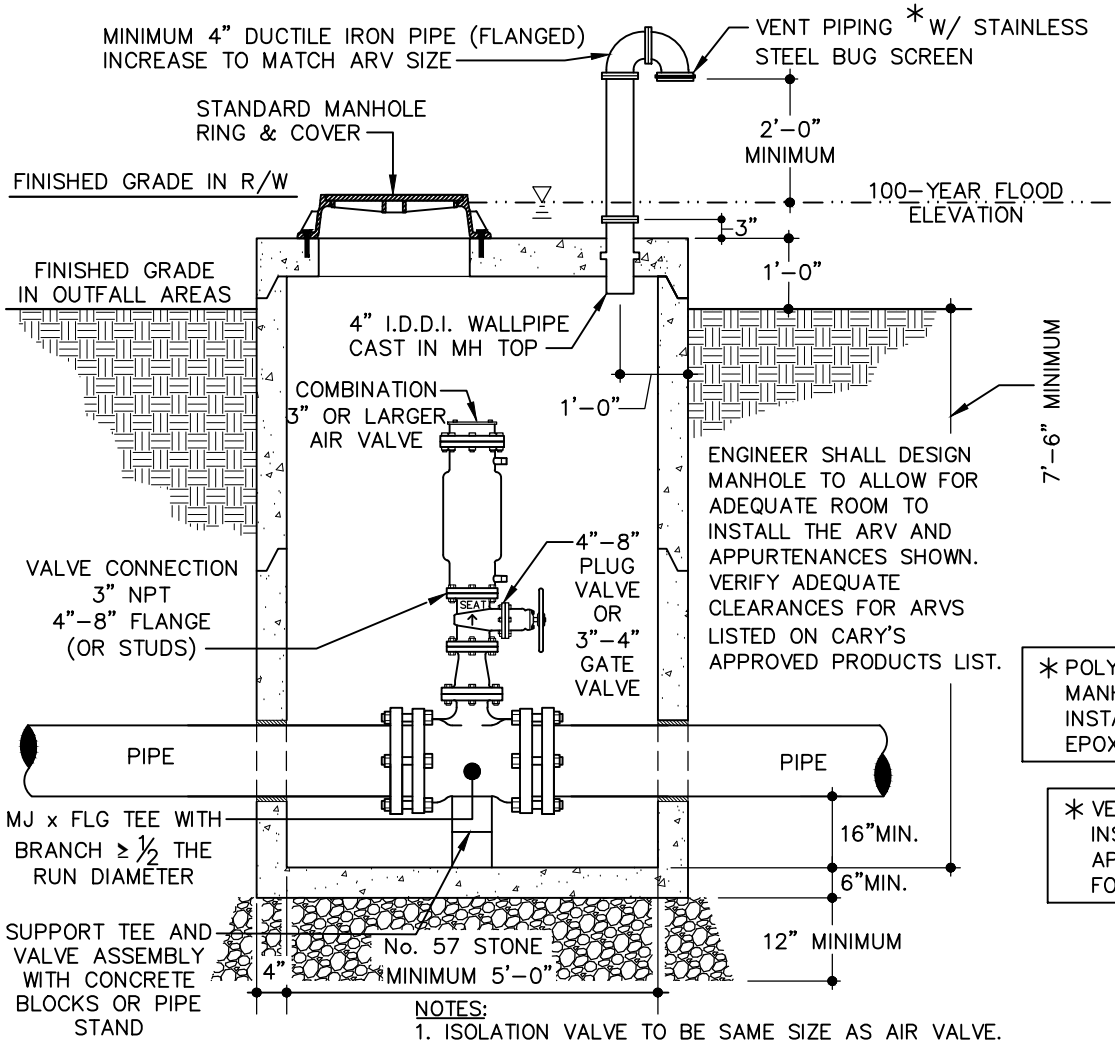

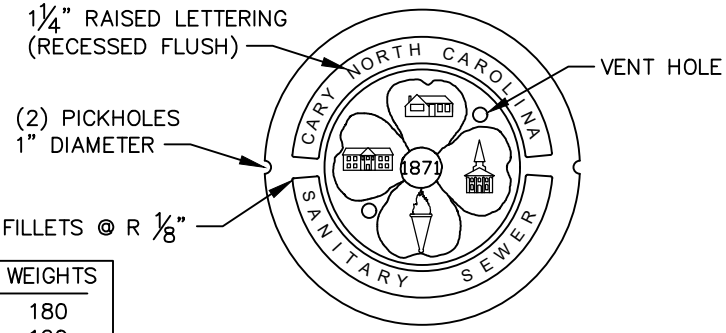

COVER TOP VIEW (IN R/W)

MINIMUM WEIGHTS	
RING	180
COVER	120
TOTAL	300

RING & COVER SPECIFICATIONS:
1. CLASS 35 GREY IRON.
2. COMPLIES WITH ASTM A48 CL35B.
3. ALL LETTERING SHALL BE CLEAN, CRISP, AND CLEARLY LEGIBLE.
4. DOMESTICALLY MADE AND MANUFACTURED IN THE USA.
5. TYPE 2 OR 3 MANHOLE RING AND COVERS SHALL BE USED IN AREAS OUTSIDE THE RIGHT-OF-WAY.

* POLYMER CONCRETE MANHOLE MAY BE INSTALLED IN LIEU OF EPOXY COATED MANHOLES.

* VENT PIPE SHALL ONLY BE INSTALLED IN ISOLATED AREAS AS APPROVED. SEE DETAIL 7200.04 FOR ODOR CONTROL DEVICE.

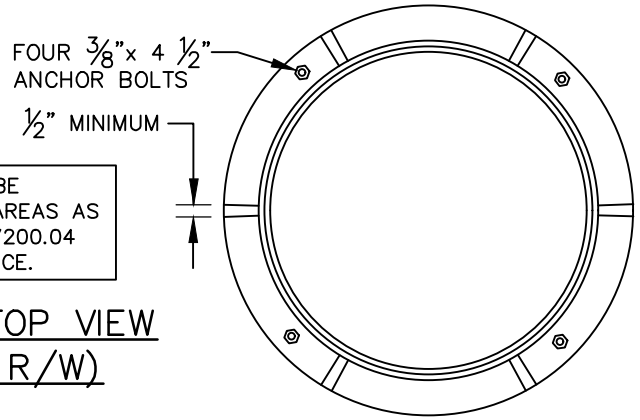

RING TOP VIEW
(IN R/W)

NOTES:
1. ISOLATION VALVE TO BE SAME SIZE AS AIR VALVE.
2. ALL PIPING AND FITTINGS, IN THE MANHOLE, SHALL BE LINED WITH APPROVED EPOXY LINING. 2 INCH PIPE SHALL BE BRASS.
3. 2 INCH VALVE AND BRASS PIPING SHALL CONNECT TO THE TEE VIA A TAPPED FLANGE, FLANGE FILLER OR FLANGE REDUCER.
4. MANHOLE INTERIOR SHALL BE COATED WITH MINIMUM 80 mils OF AN APPROVED EPOXY COATING.
5. MINIMUM 6 FOOT DIAMETER MANHOLE SHALL BE USED WITH FORCE MAINS 20 INCHES AND LARGER.
6. WHERE MANHOLE MUST BE LOCATED IN PAVED AREAS, PROVIDE TYPICAL ECCENTRIC TAPERED CONE SECTION.
7. VENT PIPE MAY BE OMITTED TO MEET RIGHT-OF-WAY REQUIREMENTS.
8. MANHOLES DEEPER THAN 12 FEET SHALL HAVE AN EXTENDED BASE.
9. THE DESIGN ENGINEER MUST SUBMIT SEALED DESIGN CALCULATIONS FOR SIZING THE ARV'S ON ALL FORCE MAINS GREATER THAN 8 INCHES IN DIAMETER.

EFFECTIVE: 07/01/24

STANDARD 3" OR LARGER COMBINATION AIR RELEASE VALVE MANHOLE (FOR FORCE MAINS)

DETAIL No.
7200.03