SHALLOW TYPE
(8 FEET OR LESS IN DEPTH)

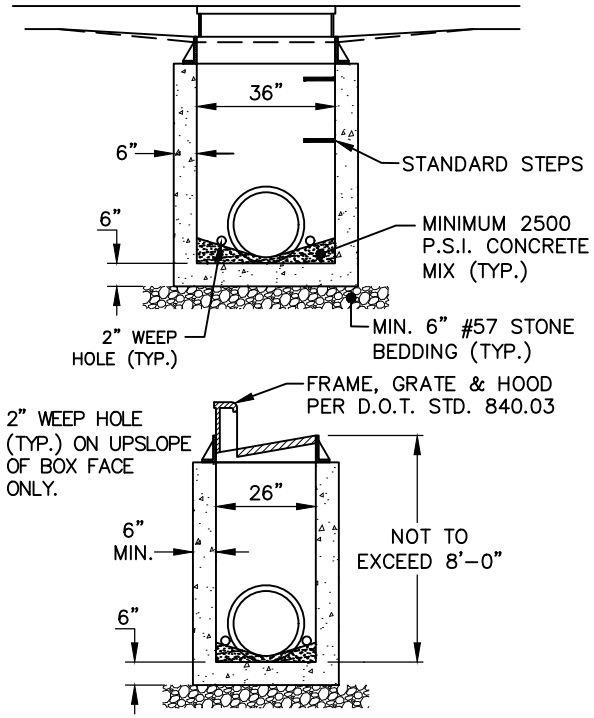

INTERMEDIATE TYPE (4'X4')
(8 FEET TO 20 FEET IN DEPTH)

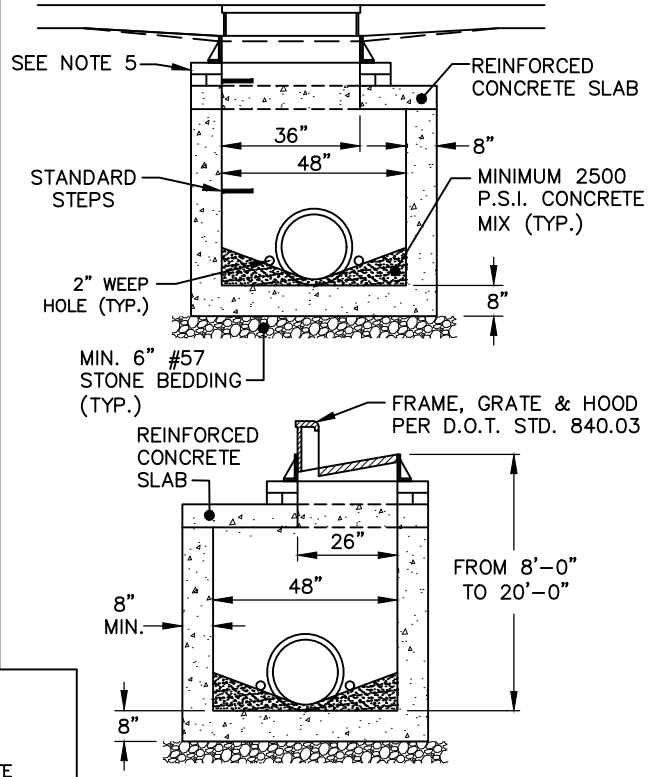

DEEP TYPE (5'X5')
(OVER 20 FEET IN DEPTH)

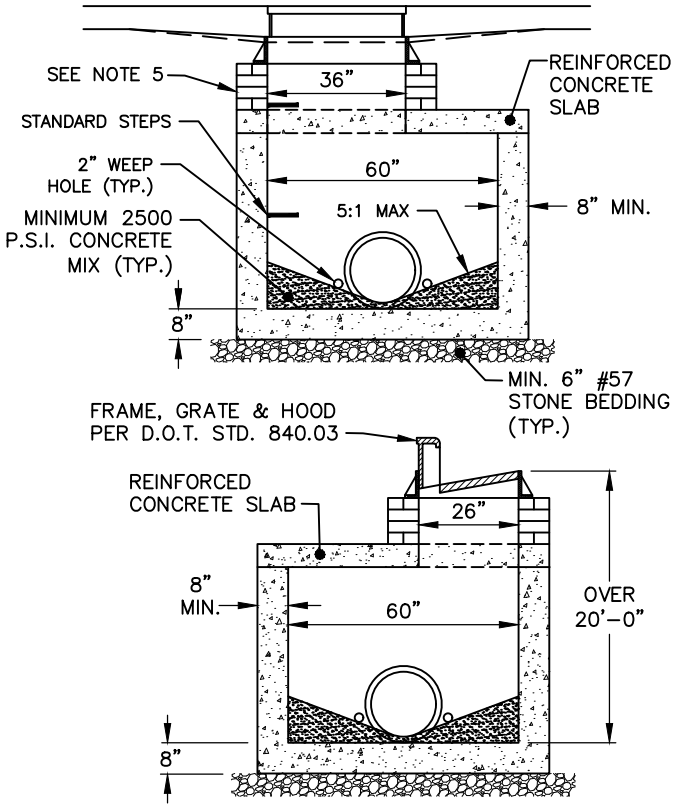

NOTES:
1. CONCRETE SHALL BE 4,000 P.S.I. MINIMUM FOR ALL PRECAST CONCRETE CATCH BASINS.
2. PRECAST CONCRETE STRUCTURES MAY ONLY BE INSTALLED TO DEPTHS CERTIFIED AS ACCEPTABLE BY THE MANUFACTURER.
3. "WAFFLE" BOXES ARE ACCEPTABLE FOR SHALLOW TYPE CATCH BASINS.
4. ONLY TOP AND BOTTOM STEPS REQUIRED ON BOXES INSTALLED IN THE PUBLIC RIGHT-OF-WAY.
5. BRICK MAY BE USED TO ADJUST FRAME, GRATE & HOOD TO SURFACE ELEVATION A MAXIMUM OF 12 INCHES.
6. ALL EXTERNAL JOINTS SHALL BE WRAPPED WITH 6" MIN. WIDTH RUBBERIZED MASTIC JOINT WRAP.
7. PLACE SAND BAG FILLED WITH #57 STONE OVER WEEP HOLES ON UPSLOPE EXTERIOR OF BOX DURING CONSTRUCTION.

SLAB DETAIL

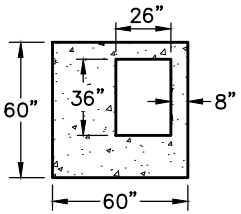

SLAB THICKNESS AND REINFORCEMENT FOR SOIL AND TRAFFIC LOADING BY AN ENGINEER

SLAB DETAIL

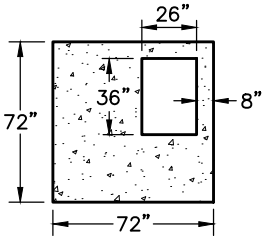

SLAB THICKNESS AND REINFORCEMENT FOR SOIL AND TRAFFIC LOADING BY AN ENGINEER

NTS

EFFECTIVE: 07/01/24

STANDARD PRECAST CONCRETE CATCH BASIN

DETAIL No.
8000.04