CARY GREASE INTERCEPTOR CONFIGURATION FOR PRECAST CONCRETE GREASE INTERCEPTOR 500 GALLONS AND GREATER IN SIZE.
PLEASE REFER TO INDIVIDUAL DETAILS FOR CARY INLET AND OUTLET SANITARY TEES AND HYDRAULIC JUMP SAMPLE VAULT REQUIREMENTS.

*COVER SHALL BE TRAFFIC RATED WHERE SUBJECT TO VEHICULAR TRAFFIC

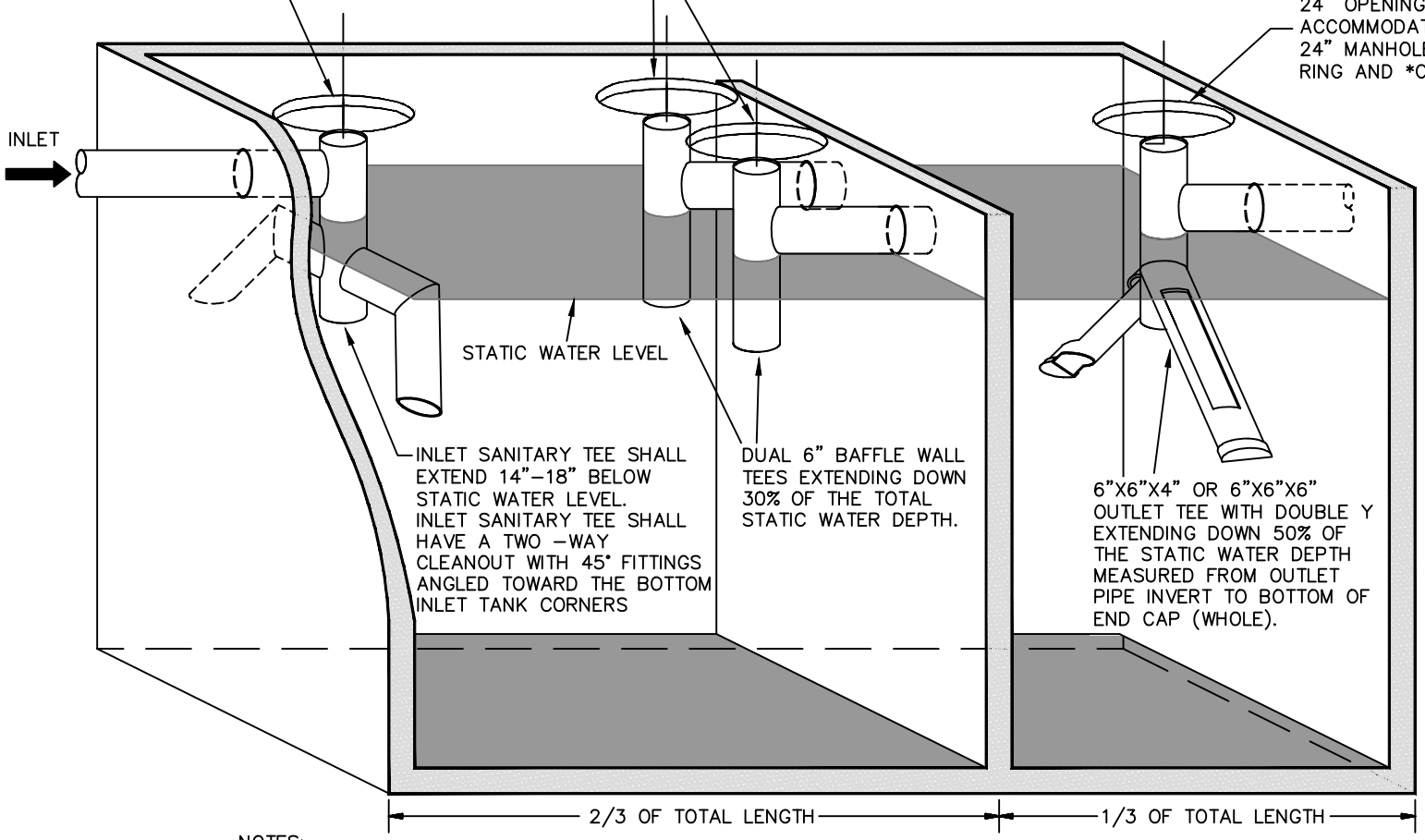

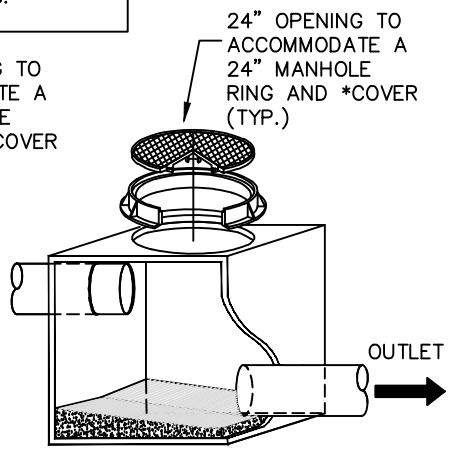

HYDRAULIC JUMP SAMPLE VAULT

(SEE DETAILS OTHER SHEET)

GREASE INTERCEPTOR AND SAMPLE VAULT SHALL BE H–20 BRIDGE LOADED IF SET IN AN AREA SUBJECT TO VEHICULAR TRAFFIC.

NOTES:

1. THE PLUMBING CONTRACTOR TYPICALLY SUPPLIES INLET, OUTLET, BAFFLE WALL TEE AND INSTALLS SLOPE IN SAMPLE VAULT. SEE INLET AND OUTLET SANITARY TEE DETAILS AND SAMPLE VAULT DETAILS FOR DESIGN SPECIFICS.
2. GROUTING OF BAFFLE WALL BOTTOM AND SIDES IS REQUIRED ON ALL NON–FIXED BAFFLE WALLS.
3. GROUTING AROUND INLET TEE, OUTLET TEE, BAFFLE TEES AND SAMPLE VAULT WALL PENETRATIONS IS REQUIRED.
4. SUPPORT STRAP(S) ON TEES MAY BE REQUIRED.

CARY

GREASE INTERCEPTOR

NOT TO SCALE